VPX360DMS / EMS Power Supply

preliminary

-40° / 85°C Operating Temperature

Long-Term Availability

Compliance

SOSA®-aligned VPX power supply compliant with ANSI/ VITA 62 & VITA 46

Compact Form

3U VPX module compliant 1inch wide module with VITA 46

Flexible Input

12 - 68 V Flexible input 24 V / 48 V

Monitoring & Standards

Embedded controller with dual I²C/IPMI and USB monitoring

Power & Efficiency

Up to 600 W with high-efficiency switching

© Kontron Hartmann-Wiener GmbH 09/2026. All rights reserved.

kontron The Power of IoT

preliminary

SOSA®-Aligned 3U VPX Power

The VPX360xMS is a SOSA®-aligned, conduction-cooled 3U VPX power supply designed for demanding defense and aerospace applications. Compliant with ANSI/VITA 62 and mechanically aligned with VITA 46, it delivers up to 600 W output power through a highly efficient 12 V-centric architecture and supports a wide 12 to 68 VDC input range.

Built for reliable operation in harsh environments, the module integrates comprehensive protection features, health monitoring, and system management capabilities. Dual I²C interfaces compliant with VITA 46.11 (IPMI 2.0) and a USB interface enable advanced configuration, monitoring, and diagnostics. Designed to meet key MIL-STD requirements, the VPX360xMS provides a robust and dependable power solution for next-generation SOSA®-aligned systems.

Power Architecture

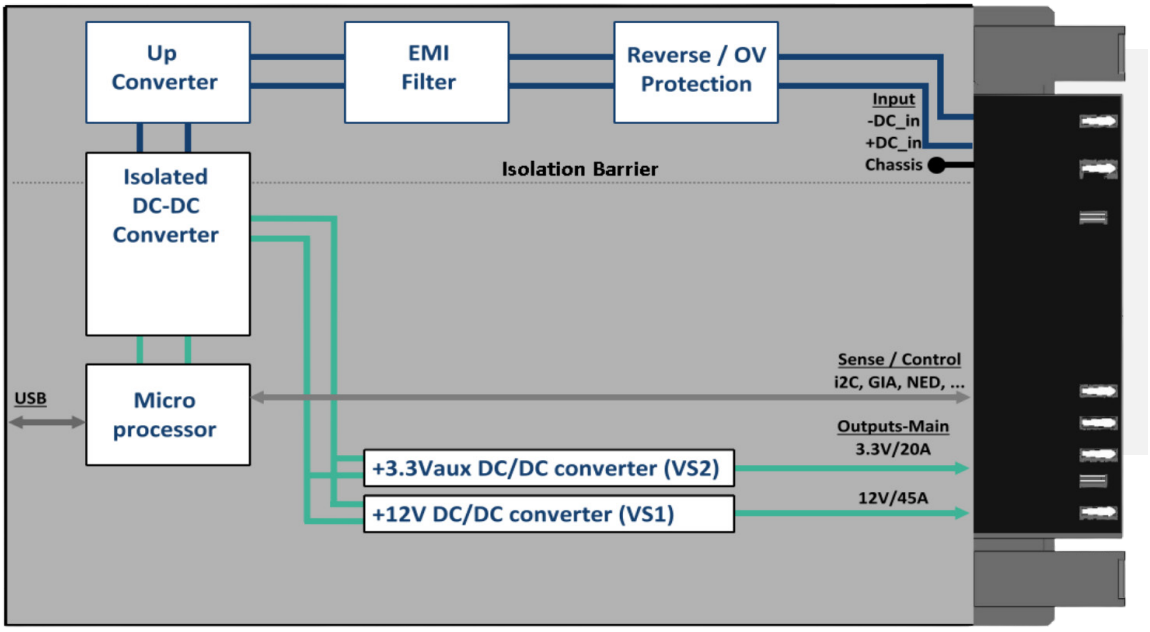

Product Configuration Overview

Specification	VPX360DMS	VPX360EMS
Input Voltage	28 VDC	48 VDC
Output Power	Up to 600 W	Up to 600 W
Mains output voltage / currents	12 V / 45 A 3.3 V / 20 A	12 V / 45 A 3.3 V / 20 A
Form Factor	3U VPX, 5HP	3U VPX, 5HP
Management	VITA 46.11 (IPMI 2.0), USB	VITA 46.11 (IPMI 2.0), USB
Compliance	ANSI/VITA 62.0	ANSI/VITA 62.0
MIL Standards	1275D, 704F, 810, 461F	1275D, 704F, 810, 461F
Coating	Acrylic (standard)	Acrylic (standard)

Configuration & Technical Data

Key Technical Specifications

Category	Parameter	Value
Mechanical	Form Factor	3U VPX CC
	Pitch	5 HP / 1.0 inch
	Weight	0.8 kg / 1.8 lbs
Environmental	Operating Temperature (at wedge lock)	-40°C to 85°C (relative humidity 95%)
	Storage Temperature	-55°C to 105°C
Isolation	Input to Output Isolation	500 V
	Input to Case Ground Isolation	500 V
	Output to Case Ground Isolation	500 V
Grounding	Case Ground to Safety Ground Resistance	< 10 mΩ (TBC)
Power	Maximum Output Power	600 W
	Maximum Input Power	~680 W
	Maximum Dissipated Power @ max. Power	~80 W
Input	Nominal Input Voltage	28 V DC / 48 V DC (different keys)
	Minimum Turn ON Voltage	12 V under no load conditions
	Minimum Turn OFF Voltage	8 V under no load conditions
	Maximum Continuous / Peak Input Voltage	68 V / ±250 V (<1 ms spike)
Protection	Input Overvoltage Protection	Outputs disable if input voltage exceeds 68 VDC for >600 ms (10 second auto-restart)
Thermal	Maximum Internal Working Temperature	125°C
	Temperature Protection Sensing Point (internal)	125°C
	Temperature Protection Sensing Point (internal)	125°C (Outputs disable when internal PCB temperature exceeds threshold)

Technical Data

Key Technical Specifications

Electrical	Fixed Switching Frequencies 12V / 3V3	520 kHz / 520 kHz
	Peak Efficiencies 12V / 3V3	93% / 82%
	Max. Output Ripple and Noise 12V / 3V3	<120 mVpp / <50 mVpp
	Max. Output Ripple and Noise (0-20 MHz Bandwidth)	<30 mVpp / <25 mVpp
Regulation	Line Regulation 12V / 3V3	<10 mV / 10 mV
	Vin=Vin,min to Vin,max, load and Tc fixed	<0.1%
	Load Regulation 12V / 3V3	60 mV / 50 mV
Output	12V / 3V3 Maximum Output Voltage (Sense Lines Open)	12.3 V / 3.45 V
Dynamic Response	Load Transient Recovery Time (50% load change condition)	1 ms
Compliance	Base specification,mechanical and electrical	VITA 62
	System management	Vita 46.11-2022 Tier 2
	MIL-STD-461F (EMI)	Designed (to be tested) in compliance with sections CE102, CS101, CS114, CS115, CS116
	MIL-STD-704F (Transient)	Designed (to be tested) in compliance for normal transients (LDC105), abnormal transients (LDC302) and distortion spectrum (LDC103)
	MIL-STD-1275D	exported & imported voltage spike, imported Voltage Surges, Imported Ripple Voltage
	MIL-STD-810G	Operating Shock Class OS2 Method 516 Procedure I Vibration Method 514.6 Procedure I & paragraph 4.4.3 / Vibration Class V3 (Vita 47) Altitude Method 500 Procedure II

Ordering Information

Article	Ordering Number	Description
VPX 360 DMS / EMS Power Supply	VPXBR360-DMS51051	VPX360DMS: 600 W VPX PSU, 28 VDC input, dual output rails RoHs
	VPXBL360-DMS21051	VPX360DMS: 600 W VPX PSU, 28 VDC input, dual output rails leaded
	VPXBR360-EMS21051	VPX360EMS: 600 W VPX PSU, 48 VDC input, dual output rails RoHs
	VPXBL360-EMS21051	VPX360EMS: 600 W VPX PSU, 48 VDC input, dual output rails leaded

Related Products

Explore Additional VPX and SOSA® Platforms

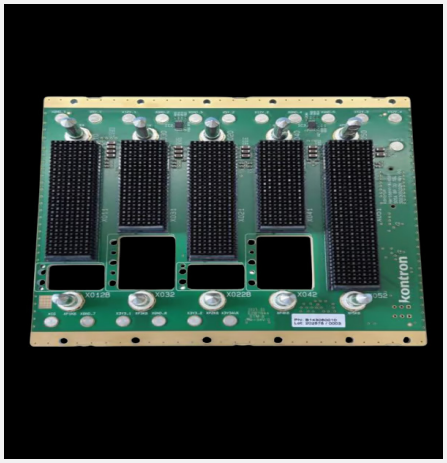

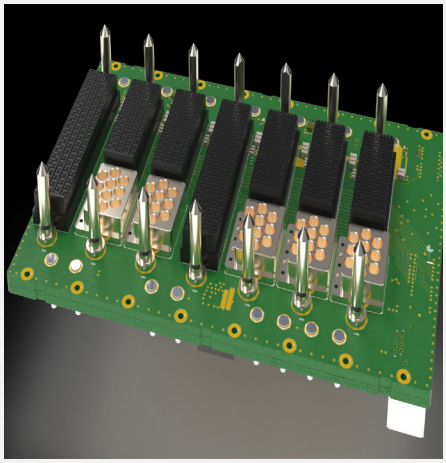

5 Slot Sosa® Backplane

100G Ethernet VPX backplane compliant with VITA 46, VITA 65 and SOSA®.

More Information

7 Slot Sosa® Backplane

100G Ethernet Backplane compliant with VITA 46, VITA 65 & SOSA®

More Information

KCC Chassis Control

Advanced Chassis Management for VPX

More Information

Kontron Hartmann-Wiener GmbH

Linde 18
51399 Burscheid

PH.:+ 49 2174678-0
sales.khw@kontron.com

Kontron Hartmann-Wiener GmbH

Motorstraße 43
70499 Stuttgart

PH.:+ 49 71113989-0
sales.khw@kontron.com

Kontron America

202 N Limestone Str., Suite 320
Springfield, OH 45503, USA

PH.:+1 937 324 2420
sales.springfield@kontron.com

More Information

© Copyright 2025 Kontron. All rights reserved.
All data is for information purposes only and not guaranteed for legal purposes. Information has been carefully checked and is believed to be accurate; however, no responsibility is assumed for inaccuracies. Kontron and the Kontron logo and all other trademarks or registered trademarks are the property of their respective owners and are recognized. Specifications are subject to change without notice.

VPX360SOSA Rev.09.26 / Version: 21. Oktober 2026, 2:21 PM