kontron
The Power of IoT

Kontron XMC-6L

Multi-Protocol Avionics Communication XMC

MIL-STD-1553, ARINC 429, Serial Interfaces & GPIO in a Single Rugged Mezzanine Card

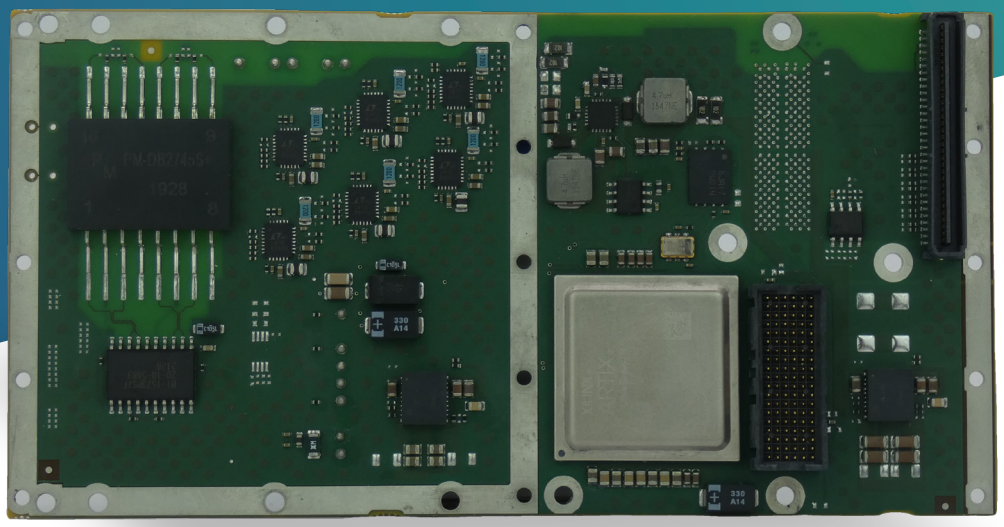

kontron
The Power of IoT

Avionics Communication XMC

Simplified Avionics Integration

The Kontron XMC-6L combines multiple avionics communication interfaces in a compact, single-width XMC mezzanine card. Integrating MIL-STD-1553, ARINC 429, serial communications and general-purpose digital I/O, it provides a versatile interface solution for defense and aerospace embedded computing systems.

By consolidating multiple communication protocols on a single module, the XMC-6L helps reduce the need for dedicated interface cards, simplifying system integration and making efficient use of available expansion space.

Multi-Protocol Connectivity

The XMC-6L provides a dual-redundant MIL-STD-1553 interface supporting Bus Controller and Remote Terminal operation, alongside four ARINC 429 receive channels and two transmit channels.

Additional serial communication interfaces and 16 TTL-level GPIOs extend connectivity to a broad range of avionics equipment and digital control signals.

Designed for Rugged Embedded Systems

Featuring a rugged conduction-cooled design, the XMC-6L is suited to embedded computing platforms operating in demanding defense and aerospace environments.

Its compact XMC form factor facilitates integration into modular computing architectures where space efficiency and interface versatility are essential.

Typical Applications

- Military and aerospace mission computers
- Avionics subsystem integration
- Multi-protocol avionics interfaces
- Legacy avionics system modernization

Block Diagram

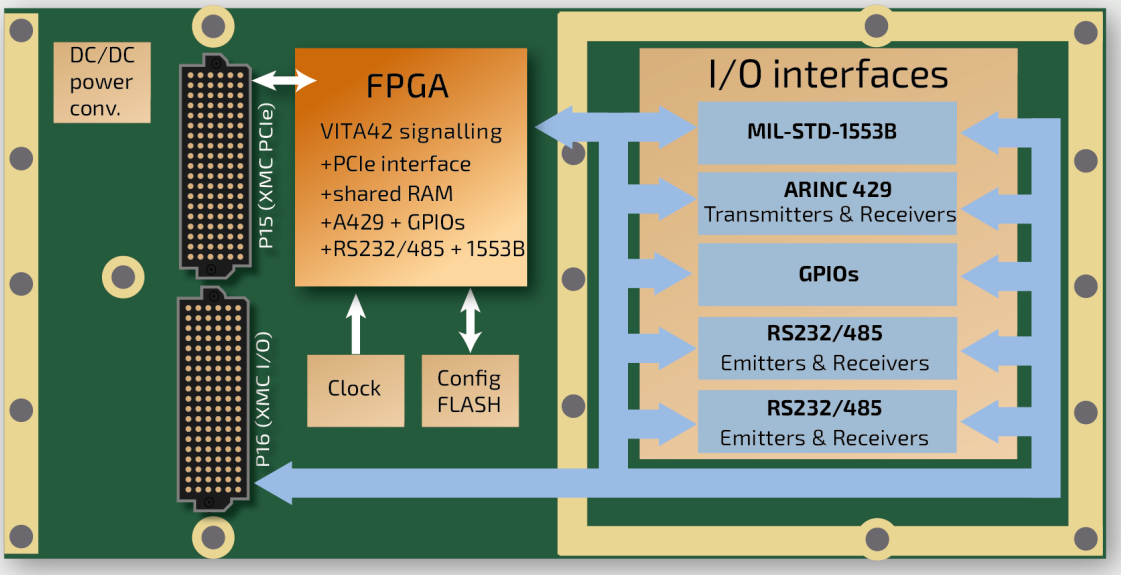

Avionics Communication XMC

Technical Information

Form Factor		Single-width XMC mezzanine card
Avionics & Digital I/O	MIL-STD-1553B	1 link, dual-redundant bus (A/B), configurable as a Bus Controller (BC) or a Remote Terminal (RT)
	ARINC-429	4 Receive and 2 Transmit ARINC-429 channels, dual-speed (12.5 Kbps or 100 Kbps) data rate
	Serial Lines	6 Receive and Transmit RS-232 or RS-485 serial lines, which can be configured as up to a mix of 6 UART (asynchronous) or 3 HDLC (synchronous) full-duplex lines (no flow control)
	GPIO	16 General Purpose I/O (GPIO), individually configurable as Input or Output, with 3.3V levels (TTL-5V input tolerant / TTL-5V output compliant).
FPGA & Host Interface	Host Interface	PCI Express up to Gen3 x8
	FPGA Architecture	FPGA-based I/O management, including real-time clock, watchdog and interrupt handling, based on Kontron's legacy LOGPMCIO design
	Monitoring & Debug	Optional AMD/Xilinx embedded monitoring and debug capabilities; contact Kontron
	FPGA Configuration	NOR Flash, ≥256 Mbit, dedicated to FPGA configuration
	Vital Product Data (VPD)	256-kbit EEPROM accessible via SMBus on the P15 connector
Software	Operating System Support	Developed and extensively tested with Yocto Linux; basic testing performed with Fedora Linux
Mechanical & Electrical	Form Factor	Single-width XMC, IEEE P1386 mechanical form factor
	Dimensions	74 x 143.75 mm (rugged conduction-cooled board)
	Cooling	Rugged conduction-cooled design
	Power Supply	VPWR: +5 V ±5% or +12 V ±5%
	Power Consumption	8 W maximum

Avionics Communication XMC

Environmental Specification

	RC - Rugged Conduction Cooled Version
Conformal Coating	Standard
Airflow	na.
Cooling Method	Conduction
Operating Temperature	-40°C to +85°C
Storage Temperature	-50°C to +100°C
Vibration Sine (Operating)	5hz to 20Hz, 2.5mm displacement 22Hz-2,000Hz - 5g Acceleration / Frequency Range
Random	Product withstand vibration as defined below, 1 hour per axis: 5 Hz to 100 Hz PSD increasing at +3 dB/octave 100 Hz to 1000 Hz PSD = 0.1 g^2/Hz 1000 Hz to 2000 Hz PSD decreasing at -6 dB/octave
Shock (Operating)	40g/11 ms Half Sine
Altitude (Operating)	-1,500 to 60,000 ft
Relative Humidity	95% without condensation

Ordering Information

Environmental Class	Article	Part Number	Description
RC	XMC-6L-RCH000	xxxx-xxxx	VITA42 Rugged Conduction Cooled 'RC' XMC-6L with AMD Artix UltraScale+ FPGA, PCIe Gen3 x8, 1 dual-redundant MIL-STD-1553B (BC/RT), 4 Rx / 2 Tx ARINC 429, 6 UART or 3 HDLC serial links, and 16 GPIOs. VITA 42 connectors, P14 rear I/O, conformal coating, -40°C to +85°C.

Please ask sales.KFR@kontron.com for a specific configuration.

Avionics Communication XMC

Related Products

VX3810 3U VPX Carrier Board

Rugged SOSA®-Aligned 3U VPX XMC Carrier with PCIe Gen4

- x8 PCIe up to Gen4 interface for high-bandwidth XMC connectivity
- XMC connector options compliant with VITA 42 and VITA 61, with VITA 88 support available on request
- Supports specialized field-bus, video, networking, FPGA and AI accelerator XMC modules
- Available in standard air-cooled and rugged conduction-cooled variants.
- Designed in alignment with the SOSA® Technical standard



More Information

Kontron Modular Computers S.A.S.

150 rue Marcellin Berthelot
ZI de Toulon-Est - BP 244
83078 Toulon Cedex 9
France

Tel.: + 33 4 98 16 34 00
sales.KFR@kontron.com
www.kontron.com

More Information

© Copyright 2026 Kontron. All rights reserved.
All data is for information purposes only and not guaranteed for legal purposes. Information has been carefully checked and is believed to be accurate; however, no responsibility is assumed for inaccuracies. Kontron and the Kontron logo and all other trademarks or registered trademarks are the property of their respective owners and are recognized. Specifications are subject to change without notice.

KTN26306-FR XMC-6L Datasheet.inddc / Version: 23. November 2026, 11:48 AM